Current part is item (3) on diagram. Available at www.oshkoshequipment.com

(1) SMR Code	(2) Federal Stock Number	(3) Description Reference number & mfg. code	Usable on code	(4) Unit of Meas.	(5) Qty Inc In Unit	(6) 15-day Maintenance alw (a) 1-5	(b) 6-20	(c) 21-50	(d) 51-100	(7) Illustration (a) Figure No.	(b) Item No.
PAOFF	4310-439-6075	COMPRESSOR ASSEMBLY, RECIPROCATING: power AB DRIVEN 10899038 (19207)		EA							
PAOZZ	2530-863-3155	COMPRESSOR, RECIPROCATING, POWER DRIVEN: MS51322-1 (96906)		EA	1	*	*	*	*	117	2
PAOZZ	5330-498-2426	GASKET: UNLOADER VALVE 11641987 (19207)		EA	1	*	*	*	*	117	3
PAOZZ		VALVE ASSEMBLY, UNLOADER: AIR COMPRESSOR N13799E (06721)		EA	1	*	*	*	*	117	4
PAOZZ	2530-828-5027	GASKET: COMPRESSOR DISCHARGE ELBOW 7748823 (19207)		EA	1	*	*	*	*	117	5
PAOZZ	5310-550-1130	WASHER, LOCK: INTERNAL TOOTH, 1/4 NOM., SIZE, UNLOADER VALVE TO COMPRESSOR MS35333-40 (96906)		EA	2	*	*	*	*	117	6
PAOZZ	5310-768-0319	NUT,PLAIN,HEXAGON: 1/4-28UNF-2B, UNLOADER VALVE TO COMPRESSOR MS51968-2 (96906)		EA	2	*	*	*	*	117	7
PAOZZ	4730-202-9744	ELBOW,PIPE TO TUBE: COMPRESSOR UNLOADER VALVE 201697 (06853)		EA	1	*	*	*	*	117	8
PAOZZ	4730-518-9043	ELBOW,FLANGE TO TUBE: AIR COMPRESSOR DISCHARGE 5189043 (19207)		EA	1	*	*	*	*	117	9
PAOZZ	4730-054-2572	NUT,TUBE COUPLING: COMPRESSOR ELBOW MS39196-4 (96906)		EA	1	*	*	*	*	117	10
PAOZZ	4730-054-2571	SLEEVE, COMPRESSION: COMPRESSOR ELBOW MS39197-4 (96906)		EA	1	*	*	*	*	117	11
PAOZZ	4730-078-4097	ELBOW, TUBE TO BAR: DISCHARGE AIR COMPRESSOR 8748337 (19207)		EA	1	*	*	*	*	117	12
PAOZZ	5310-959-4679	WASHER,LOCK: COMPRESSOR DISCHARGE AND INLET ELBOW MS35340-45 (96906)		EA	4	*	*	*	*	117	13
PAOZZ	5306-225-8503	BOLT,MACHINE: 5/16-18UNC-2A X 1 3/4, DISCHARGE ELBOW MS90725-39 (96906)		EA	2	*	*	*	*	117	14
PAOZZ	2530-818-0508	GASKET: COMPRESSOR AIR INLET ELBOW 7748826 (19207)		EA	1	*	*	*	*	117	15

Current part is item (3) on diagram. Available at www.oshkoshequipment.com

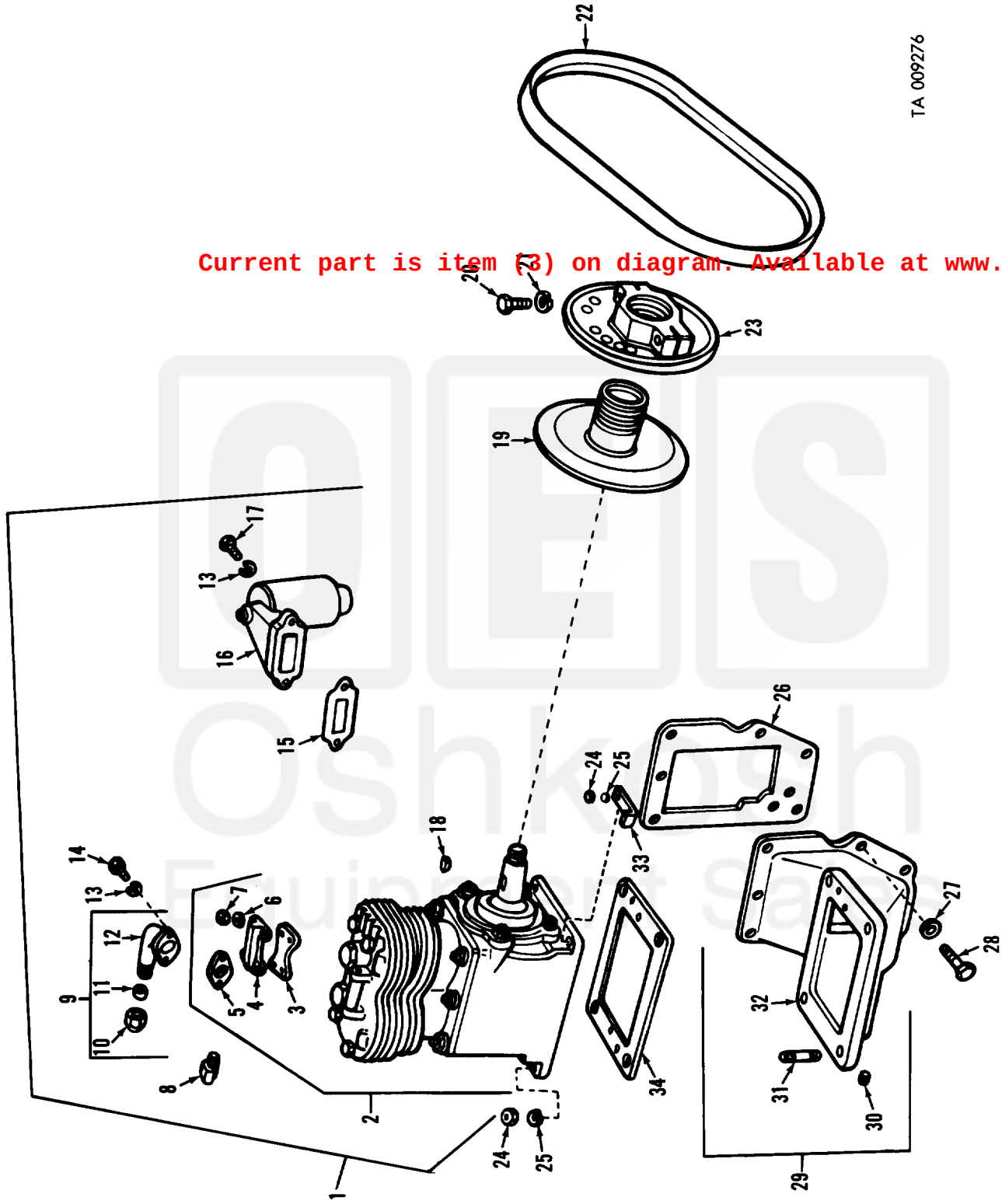

Figure 117. Air compressor and related parts—multifuel.

Current part is item (3) on diagram. Available at www.oshkoshequipp

Current part is item (3) on diagram. Available at www.oshkoshequipp